FRONT FENDER APRON (ASSY)

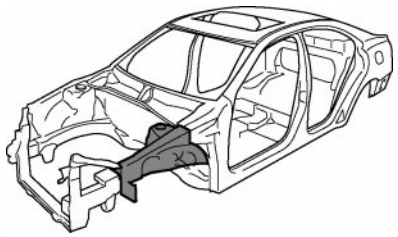

F25877A

With the radiator upper support, cowl top side reinforcement and front body pillar lower gusset removed.

Symbol meaning

REMOVAL	: Remove Weld Points	: Cut with disc sander, etc.
INSTALLATION	: MIG Plug Weld	: Tack Weld

F25877B

REMOVAL·INSTALLATION

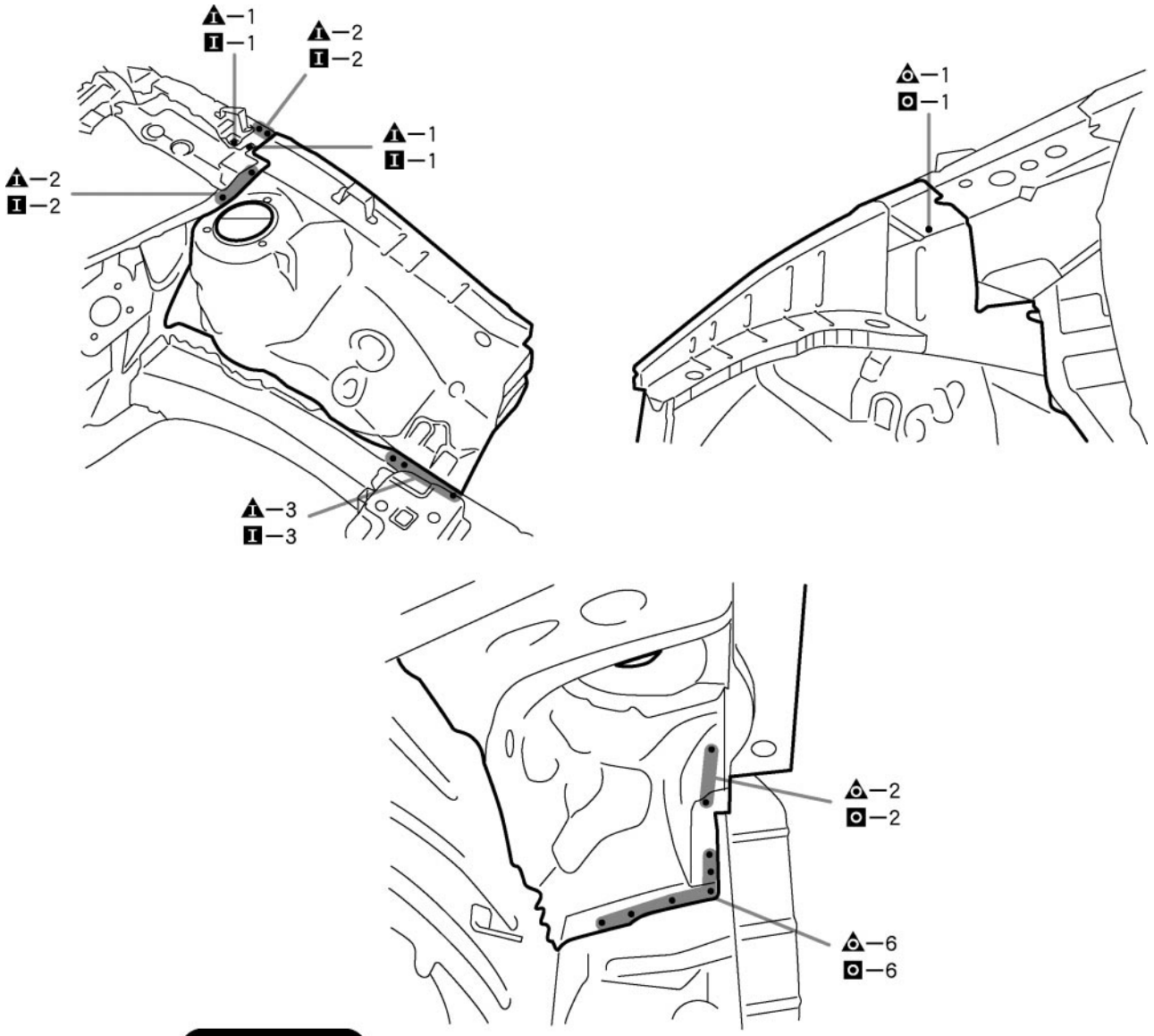

CAUTION

Make sure to attach correctry in accordance with the body dimention diagram as this parts affects the front wheel alignment.

F25877

INSTALLATION POINT

1 Inspect the fitting of the related parts around the new parts before welding. This affects the appearance of the finish.

2 Temporarily install the new parts and measure each part of the new parts in accordance with the body dimension diagram. (See the body dimension diagram)

Symbol meaning

REMOVAL	: Remove Weld Points	: Cut with disc sander, etc.
INSTALLATION	: MIG Plug Weld	: Tack Weld

F25877B

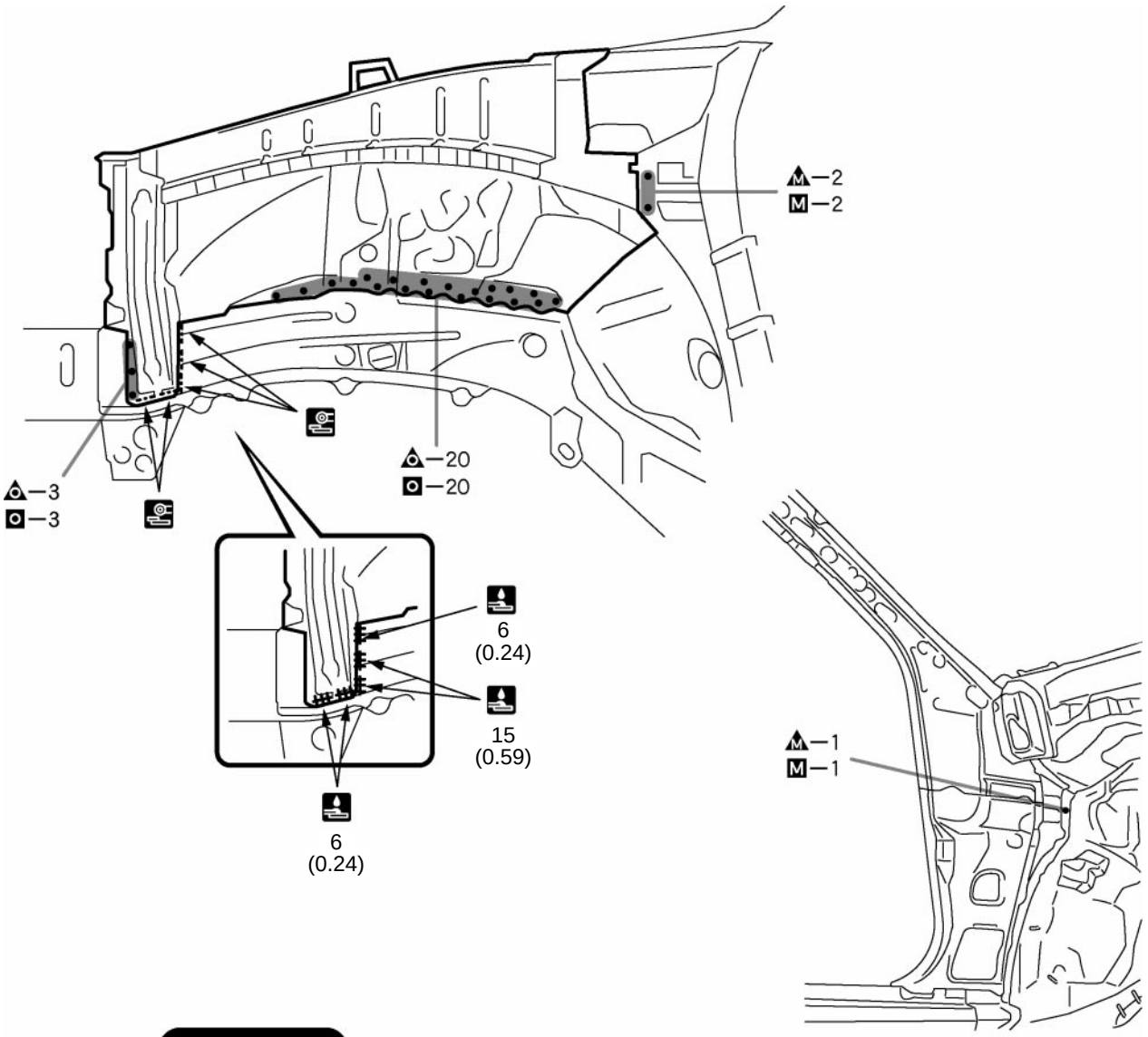

CAUTION

Make sure to attach correctry in accordance with the body dimention diagram as this parts affects the front wheel alignment.

mm (in.)

F25878

INSTALLATION POINT

1 Inspect the fitting of the related parts around the new parts before welding. This affects the appearance of the finish.
2 Temporarily install the new parts and measure each part of the new parts in accordance with the body dimension diagram. (See the body dimension diagram)
3 After welding, apply body sealer and undercoating to the corresponding parts. (See the paint·coating)
4 After applying the top coat, apply anti-rust agent to the internal panel portion of the closed section structural weld points.